POLITECNICO DI MILANO

Fault & Event Tree Analysis (FTA & ETA)

Exercise lesson

Bingsen Wang (bingsen.wang@polimi.it)

Politecnico di Milano
Dipartimento di Energia

Fault Tree Analysis (FTA)

Exercise 1: Simple Systems

- Construct the fault tree for the failure of the systems in the Figure.
- Write the systems structure functions.
- Reduce them to obtain their minimal cut sets.

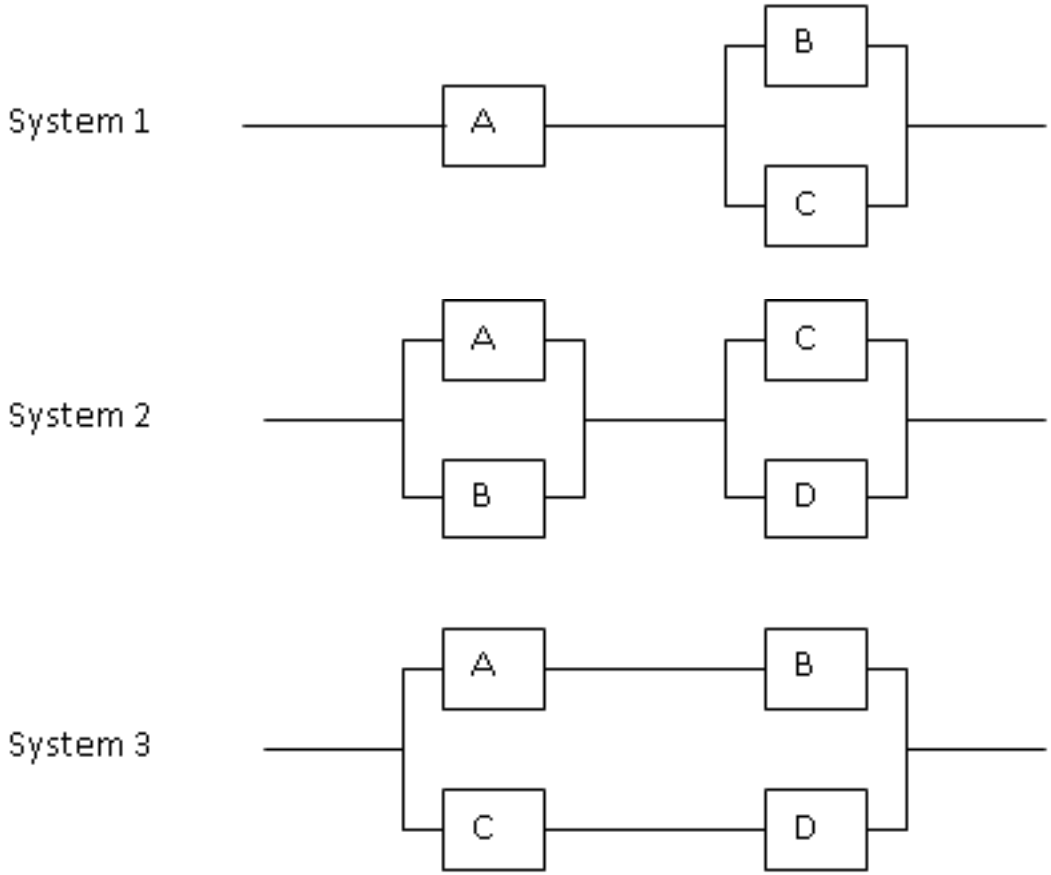

Exercise 2: Reliability Block Diagram

Consider the Reliability Block Diagram in the Figure.

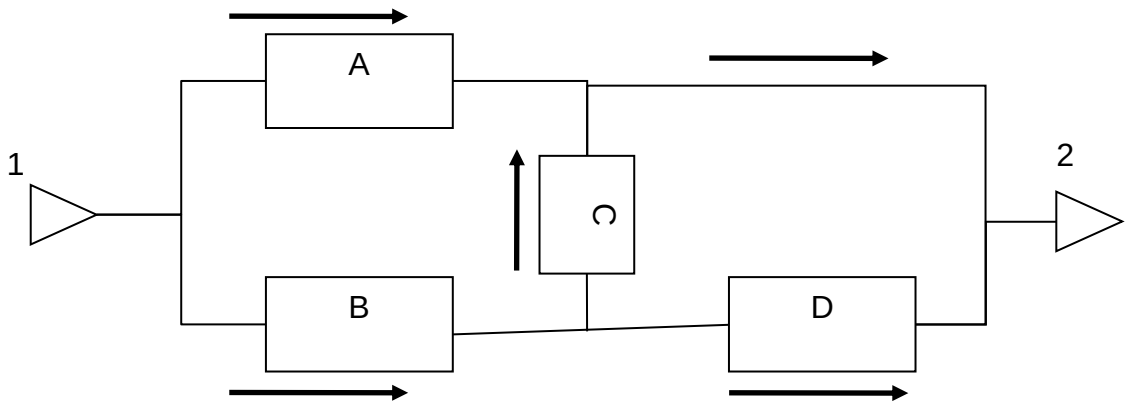

You are asked to:

1. Build the Fault Tree corresponding to the top event: ‘no flow from 1 to 2’.
2. Find the minimal cut sets.
3. Compute the system unavailability, given that the unavailability of each component is U=0.01.

Exercise 3: Electrical generating system

An electrical generating system is shown in the figure below in block diagram form. Only the major components are to be considered: the engines E_1, E_2, and the generators G_1, G_2, G_3. Each generator is rated at 30 KVA. The system is required to supply at least 60KVA.

1. Draw a fault tree for the failure of the system to satisfy the required demand.
2. Find the minimal cut sets.
3. Estimate the unreliability of the system for one month (720 h) operation given that the failure rate for each engine is $5\ 10^{-6}\ h^{-1}$ and for each generator $10^{-5}\ h^{-1}$ (assume failures of components obey exponential distribution)

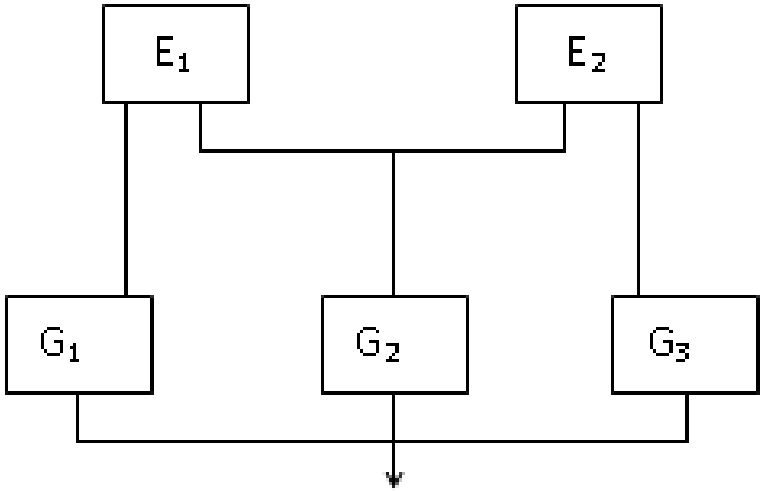

Exercise 4: Domestic Hot Water System

In the domestic hot water system in the Figure, the control of the temperature is achieved by the controller opening and closing the main gas valve when the water temperature goes outside the preset limits

$T_{\min} = 140\text{F}, T_{\max} = 180\text{F}.$

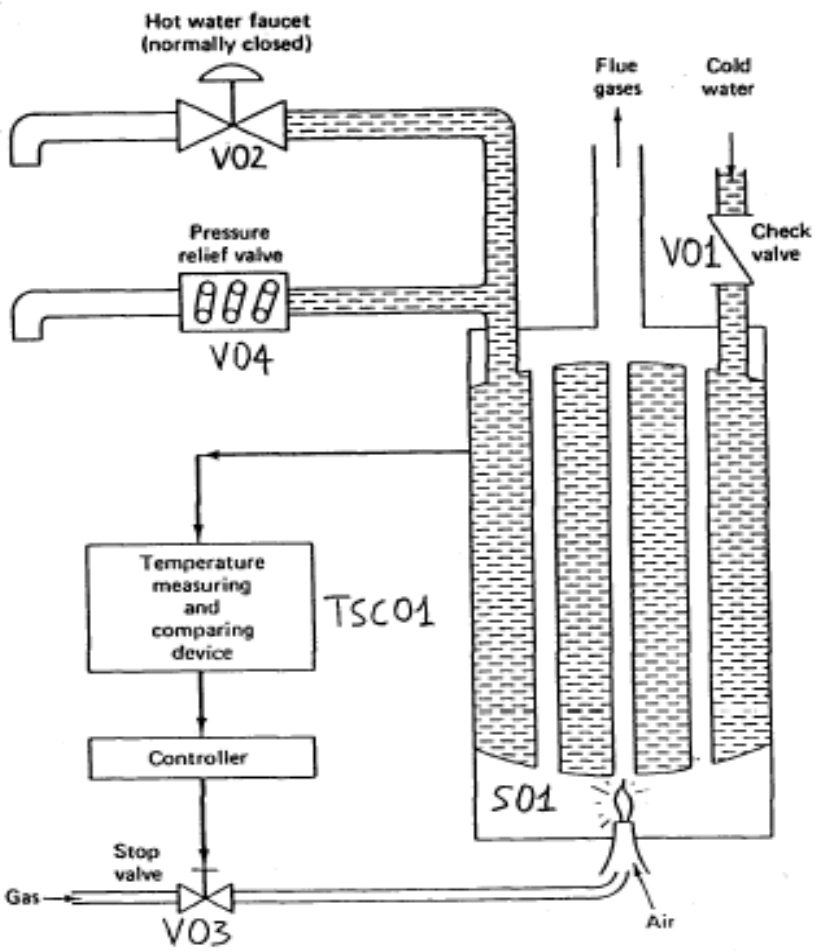

1. Formulate a list of undesired safety and reliability events
2. Construct the fault tree for the top event rupture of water tank assuming only the following primary failure events:

   1: basic tank failure
   2: relief valve jammed closed
   3: gas valve fails jammed open
   4: controller fails to close gas valve
   5: basic failure of temperature Monitor

3. Find the minimal cut sets;
4. Assume primary failure event probabilities equal to 0.1 and compute the probability of the top event working through the fault tree;
5. Compute the probability of the top event from the minimal cut sets found in 3.

Event Tree Analysis (ETA)

Exercise 1: Lamp System

The system represented in the figure illustrates the operation of a lamp fed by two batteries and a power unit. In order to have energy in the circuit it is enough that one of the energy sources (i.e., battery 1, battery 2, power unit) , works.

Build the event tree for the event “failure of the lighting system” and compute its probability based on the component probabilities indicated on the Figure.

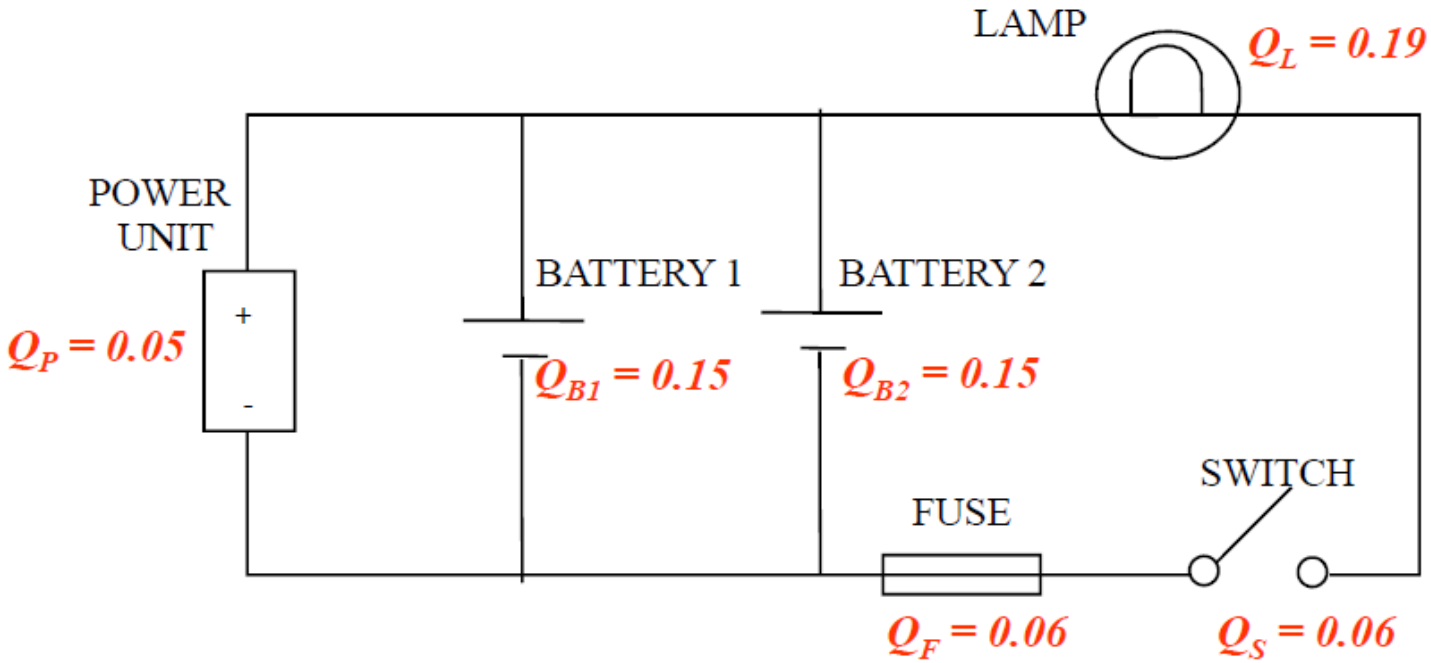

Exercise 2: Gas Release (I)

In a process plant, flammable gas that is accidentally released can be detected by a process operator working in the area.

The process operator can only detect gas if she is present in the area where the gas is released. There are several operators working in the plant, but only one operator is on duty at any time.

If she is not present, she can not detect the gas, but if she is present, there is a possibility that this may happen. **An operator is present 30 % of the time**.

The probability that the operator will not detect the gas is 0.3. If the gas is released, there is a possibility that the release may ignite.

The probability of ignition is 0.1 given that gas is released.

The frequency of gas release is 0.5 per year. If the gas is detected (automatically or by the operator), the operator will try to escape and there is a **50 % probability that she escapes in time if she is present when a gas release takes place**.

Given that someone is in the area when ignition occurs, **the probability of being killed is 0.2**.

Exercise 2: Gas Release (II)

a) Prepare an event tree with initiating event (top event) “Gas released” and end events “Operator killed” and “Operator not killed” .
b) What is the frequency of an operator being killed?
c) What is the LIRA due to gas releases? (LIRA is the annual probability of being killed, given that a person is present in an area for 100% of the time)